Technology Informatics Design Endeavour (TIDE)

Expression of Interest (EOI)

Request for: Construction of foundation for prefabricated Toilets in 13 Government Schools in Kolar cluster, Kolar Region.

Year: 2025

Organization: Technology Informatics and Design Endeavour (TIDE)

1. Background:

Technology Informatics Design Endeavour (TIDE) is a 30-year-old Bengaluru based NGO providing technology solutions for societal needs. TIDE is an award-winning NGO, and its work encompasses biomass-based cooking / industry solutions, energy efficiency / conservation, climate education, WASH and waste management, technology-based skilling & rural livelihood augmentation, and rural women leadership. TIDE complies with all legal and statutory requirements diligently. TIDE is a registered society and has valid FCRA, CSR certification, 12A, 80G, PAN. All audit and annual reports are available on the website. The work culture at TIDE is professional, caring and gender neutral. We strive to offer exciting career growth opportunities for deserving candidates.

Access to safe and inclusive sanitation remains a critical need in many rural government schools across Karnataka. Inadequate toilet facilities directly affect student health, attendance, and dignity, especially for girls. This project aims to bridge that gap by constructing child-friendly, gender-sensitive toilets and handwashing stations. The intervention is expected to improve hygiene practices, reduce absenteeism, and create a healthier school environment for sustained learning outcomes.

Title	"Construction of foundation for prefabricated toilets in schools in Kolar Cluster".
Location	Kolar, Karnataka
Nature of Assignment	The project involves the Construction of a foundation for prefabricated toilets in 13 Government schools in Kolar Cluster. The scope of work includes the procurement of materials and labor and undertaking civil construction.
Contract period	The contract period will be for the duration of 30 Days

2. Objectives

To complete the construction of foundations for toilet blocks in 13 government schools, adhering to best quality, ensuring readiness for installation of superstructure by ensuring timely completion of work, proper documentation.

3. Scope of Work

a) Carry out site preparation activities, including clearing, levelling, and layout marking as per approved plans.
b) Excavation for foundation, biodigesters and soak pit as per the specifications provided in drawings.
c) Laying of 90mm thick PCC for both foundation and Biodigesters.

d) Foundation work (Brickwork footing) as per the technical specifications provided in drawings.
e) Construct foundation up to the plinth level (Brick work), including back filling and compaction where required.
f) Plastering of the above the earth part of foundation up to plinth level.
g) Construction of (including plastering) steps and ramp.
h) Support for erection of superstructure.
i) Plumbing connections of toilets to the biodigester.
j) Ensure compliance with basic quality and safety standards throughout all stages of execution.
k) Facilitate periodic inspections by project engineers or designated monitoring teams.
l) Maintain daily records of human power, material use, and construction progress at each site.
m) Complete all assigned foundation works across the 13 schools within the agreed project timeline.
n) Hand over each site in a condition ready for the next phase of construction (superstructure).

The list of schools for undertaking work is attached below:-

Serial	School Name	Address	District	Block Name
1	Karnataka Public School, Narasapura	Narasapura, Kolar, Karnataka 563133	Kolar	Kolar
2	Government Higher Primary school Vemagal	Vemagal, Kolar , Karnataka 563102		
3	Government High School Vemagal	Near Vemagal, Kolar, Karnataka 563102		
4	Government High School, Arabhikothanur	Arabhikothanur, Vemagal Kolar, Karnataka		
5	Government Higher Primary School, Kylanuru	Kylanuru, Kolar, Karnataka-563157		
6	Government Urdu Higher Primary School,Milath Nagar Kolar	Ward 34 (Millath Nagar), Kolar City, Karnataka 563101		
7	Government High School, Huthuru	Huthuru, Kolar Block, Kolar , Karnataka		

8	Government High School Muduvadi	Muduvadi, Kolar Block, Kolar , Karnataka 563126		
9	Government Higher Primary School Yelesandra	Yelesandra, Bangarapete (Bangarpet) Taluk, Kolar District, Karnataka – 563139	Kolar	Malur
10	Government Boys Higher Primary School, Malur	Ward 14 (Junior College area), Malur Town, Kolar District, Karnataka – 563130		
11	Government High School, Lakkur	Lakkur village, Malur Taluk, Kolar District, Karnataka		
12	GHPS Shivanapura	Shivanapura, Kudragera (North4 block), Bengaluru Urban North District, Karnataka – 562123	Bengaluru Rural	Bengaluru Rural
13	GHPS Kumbalahalli	Kumbalahalli village, Alappanahalli area, Hosakote Taluk, Bangalore Rural District, Karnataka – 562114		

Map for schools is attached in Annexure.

4. Eligibility criteria

Sl. No.	Criteria	Requirement
1	Legal Status	Registered entity (Proprietorship / Partnership / LLP / Pvt. Ltd. / Registered Firm)
2	Tax and Compliance Documents	Valid PAN, GST registration
3	Experience in Similar Works	At least 3 completed civil infrastructure projects in the last 5 years (preferably school-related)
4	Financial Turnover	Minimum annual turnover of ₹30 lakhs in any of the last 3 financial years
5	Blacklisting Status	Not blacklisted or debarred by any government, donor, or CSR agency
6	Safety & Child-Friendly Construction Practices	Commitment to comply with child protection, safety, and labour welfare norms
7	Local Presence	Contractors with a presence in Kolar / Bengaluru Rural are preferred for faster mobilisation

5. Deliverables

Completion of foundation works - including site clearance, excavation, Brickwork footing, and plinth level- for toilet infrastructure in 13 government schools in Kolar district.

6. Duration of the assignment

The project shall be executed within 30 days of the contract's award, shall be delivered by the **1st week of August.**

Activity	July 1st week	July 2nd week	July 3rd week	July 4th week	August 1st week
Award of contract					
Site preparation & Earthwork					
Construction of Foundation					
Installation of Biodigester along with a soak pit					
Plumbing and final connections					
Handover for superstructure					

7. Payment Terms

The payment shall be made:

1. Once the construction work is completed and handed over as per the agreed design and estimates.
2. Based on the actual quantity of work done, subject to the engineer's verification and certification.
3. Along with the invoice, the final BOQ of work that has been completed is to be submitted for payment.
4. Payment against any running bill shall be made after discussion with the contractor, with the terms and conditions agreed upon mutually.
5. The percentage of retention amount shall be discussed before awarding the contract.
6. Payment timeline shall be discussed with the winning bidder and shall be mentioned in the contract.

8. Other Terms and Conditions

1. Arrangement of labor and ensuring their safety during construction shall be the responsibility of the contractor. At no case, TIDE shall be held liable/ responsible for any loss or damage during the construction period.
2. Material safety at the site is the responsibility of the contractor.
3. Transportation of material from one site to another if any is the responsibility of the contractor. The contractor to arrange the necessary logistics for the same.

9. Submission of Proposal and Deliverables

The proposal must be submitted over email to the email id: info@tide-india.org and manager@fishabitat.org with the following documents attached,

- Supporting documents for eligibility and evaluation criteria
- Self-certification of not being blacklisted by central/state government agencies.
- Bid to be submitted along with BOQ for this construction work. Bid format is attached as Annexure as I, II, III, IV & V.

10. Evaluation & Shortlisting

Shortlisted shall be informed for a site briefing and submission of financial quotations. Final selection will be based on relevant experience, capacity, local presence, and quality compliance.

11. Contact Information

For any clarification, contact:

Name- Santhosh Garakahalli S Designation-Manager Email ID- manager@fishabitat.org Phone Number- : +91 9742896066 Organization Address- Foundation for Inclusive and Sustainable Habitat Tarana, #7, 1st floor, Kambipura, Kengeri, Bengaluru-560060, India	Name- Kalyan L Designation-Community Mobilsier Email ID- kalyan.l@tide-india.org Phone Number- : +91 99727 62031 Organization Address- Technology Informatics Design Endeavour FF-1, Sapthagiri Apartments, No.30, 10th Cross, 15th Main Road,RMV Extension, Sadashiv Nagar, Bengaluru – 560080

12. Annexures

- Annexure I: Letter for EOI Submission to Be Submitted on the Letter Head of the Institution
- Annexure II: Information regarding any Conflicting activities and declaration
- Annexure III: Details of a minimum of 3 similar works executed by the bidder.
- Annexure IV: Quote/Bid FORM
- Annexure V: CVs of the team members who are likely to work on the project.
- Annexure VI: Maps for School
- Annexure VII: Drawings for school

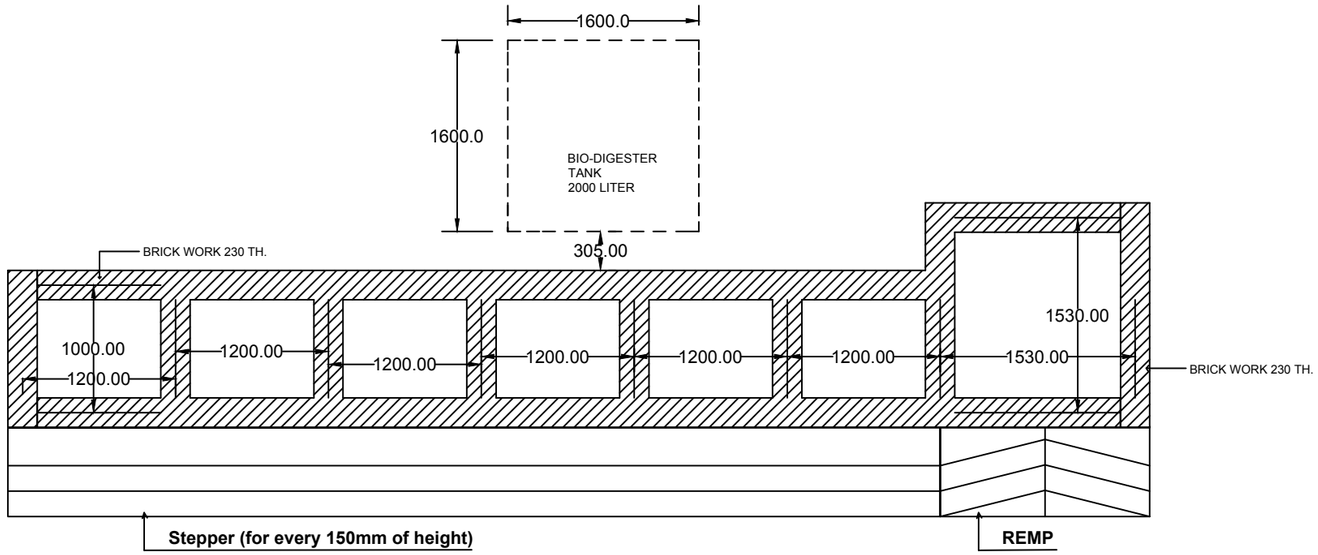

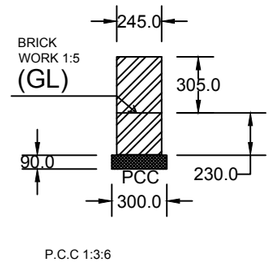

TYPICAL
FOUNDATION DETAIL

SECTION PLAN OF TOILET
FOUNDATION

RAW MATERIALS		
1.	BRICKS	1st CLASS BRICKS
2.	CEMENT	PPC 43 GRADE
3.	SAND	COARSE SAND
4.	P.C.C.	1:3:6
5.	BRICKS WORK	1:5
6.	12MM INTERNAL PALSTER	1:5

NOTE:- All material, thickness and specifications are per the technical specifications and SOW, as provided in the RFP.

TECHNICAL SPECIFICATION	
MATERIAL : -	
DENSITY : -	
GRADE: -	
THICKNESS: - (WITHOUT POWDER COATING)	
COLOR: -	
POWDER COATING TYPE: -	
POWDER COATING THICKNESS: -	
PLATING: -	NA
PLATING THICKNESS: -	NA
PART WEIGHT: -	

REV.	DATE	PHASE	DESCRIPTION
5	00/00/00		
4	00/00/00		
3	00/00/00		
2	00/00/00		
1	00/00/00		

M3 TOILET RESOURCES PVT. LTD.

ISSUE DATE: - 17/06/2025

ISSUE NO. : -00

SCALE: - N. T. S

PART DESCRIPTION : - Toilet Foundation Details

PROJECT NAME : - Bangalore Toilets

PREPARED BY	CHECKEDBY	APPROVEDBY
NARESH PALIWAL		

CRITICAL DIMENSIONS SHALL BE AS PER : IS2102 -1993 (MEDIUM)

0....6	>6....30	>30....120	>120....400	>400....1000	>1000....2000
±0.1	±0.2	±0.3	±0.5	±0.8	±1.2

GENERAL TOLERANCE SHALL BE AS PER : IS2102 -1993 (COARSE)

0....6	>6....30	>30....120	>120....400	>400....1000	>1000....2000
±0.2	±0.5	±0.8	±1.2	±2	±3

ALL DIMENSIONS ARE IN 'MM'

FILE PATH : -

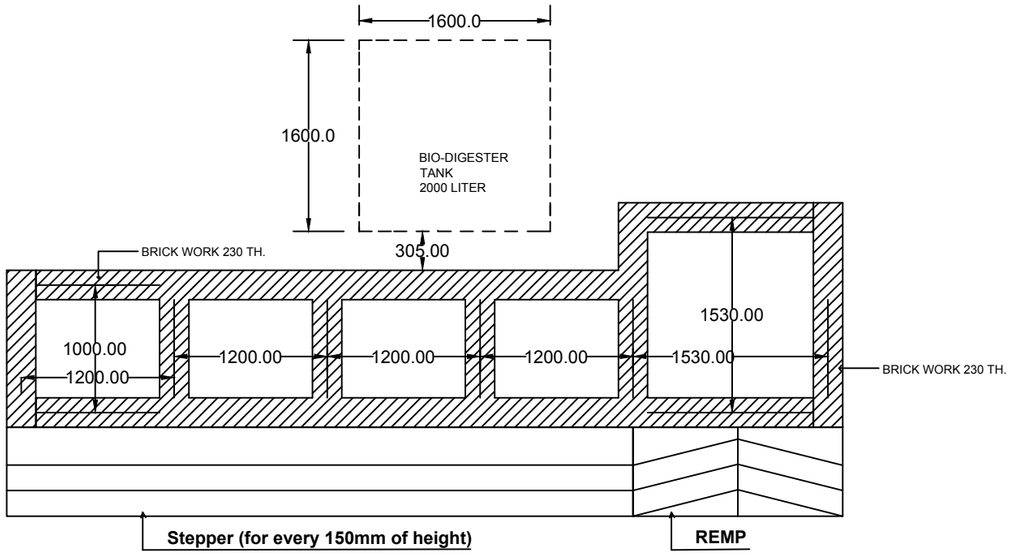

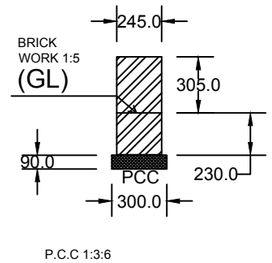

TYPICAL
FOUNDATION DETAIL

SECTION PLAN OF TOILET
FOUNDATION

RAW MATERIALS		
1.	BRICKS	1st CLASS BRICKS
2.	CEMENT	PPC 43 GRADE
3.	SAND	COARSE SAND
4.	P.C.C.	1:3:6
5.	BRICKS WORK	1:5
6.	12MM INTERNAL PALSTER	1:5

RATIO

NOTE:- All material, thickness and specifications are per the technical specifications and SOW, as provided in the RFP.

TECHNICAL SPECIFICATION	
MATERIAL : -	
DENSITY : -	
GRADE: -	
THICKNESS: - (WITHOUT POWDER COATING)	
COLOR: -	
POWDER COATING TYPE: -	
POWDER COATING THICKNESS: -	
PLATING: -	NA
PLATING THICKNESS: -	NA
PART WEIGHT: -	

REV.	DATE	PHASE	DESCRIPTION
5	00/00/00		
4	00/00/00		
3	00/00/00		
2	00/00/00		
1	00/00/00		

M3 TOILET RESOURCES PVT. LTD.

ISSUE DATE: -17/06/2025 | ISSUE NO. : -00 | SCALE: - N. T. S

PART DESCRIPTION : - Toilet Foundation Details

PROJECT NAME : - Bangalore Toilets

PREPARED BY	CHECKEDBY	APPROVEDBY
NARESH PALIWAL		

CRITICAL DIMENSIONS SHALL BE AS PER : IS2102 -1993 (MEDIUM)

0....6	>6....30	>30....120	>120....400	>400....1000	>1000....2000
±0.1	±0.2	±0.3	±0.5	±0.8	±1.2

GENERAL TOLERANCE SHALL BE AS PER : IS2102 -1993 (COARSE)

0....6	>6....30	>30....120	>120....400	>400....1000	>1000....2000
±0.2	±0.5	±0.8	±1.2	±2	±3

ALL DIMENSIONS ARE IN 'MM'

FILE PATH : -